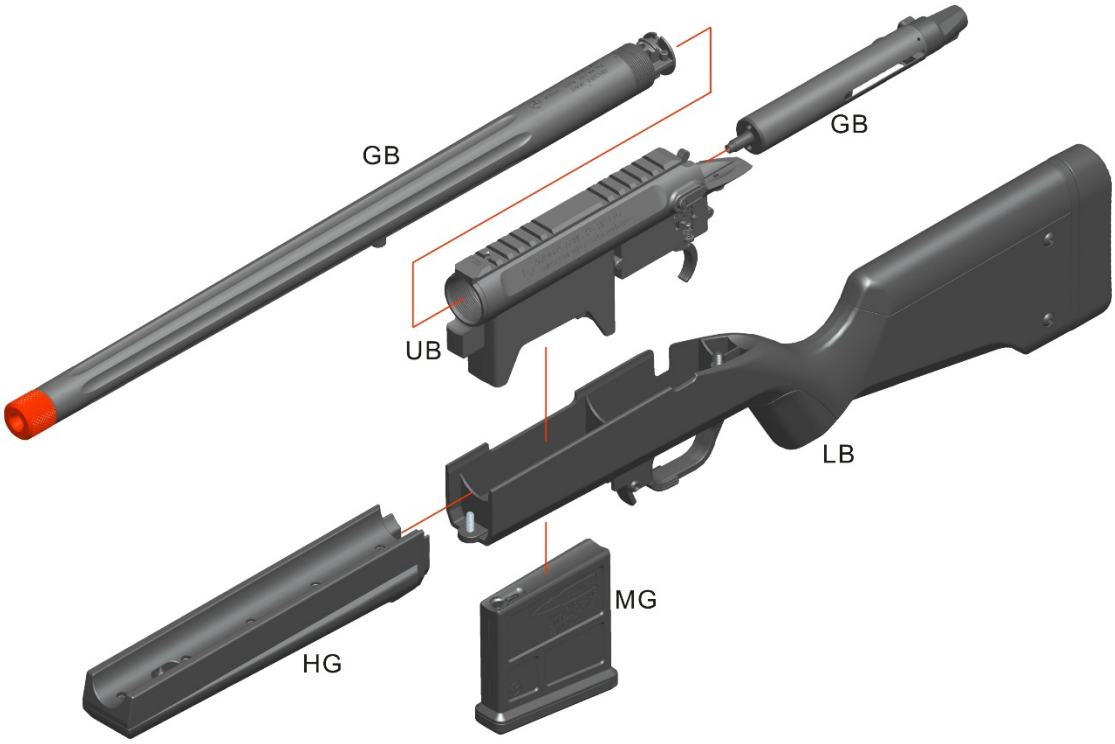
GB
GB
UB
LB
MG
HG

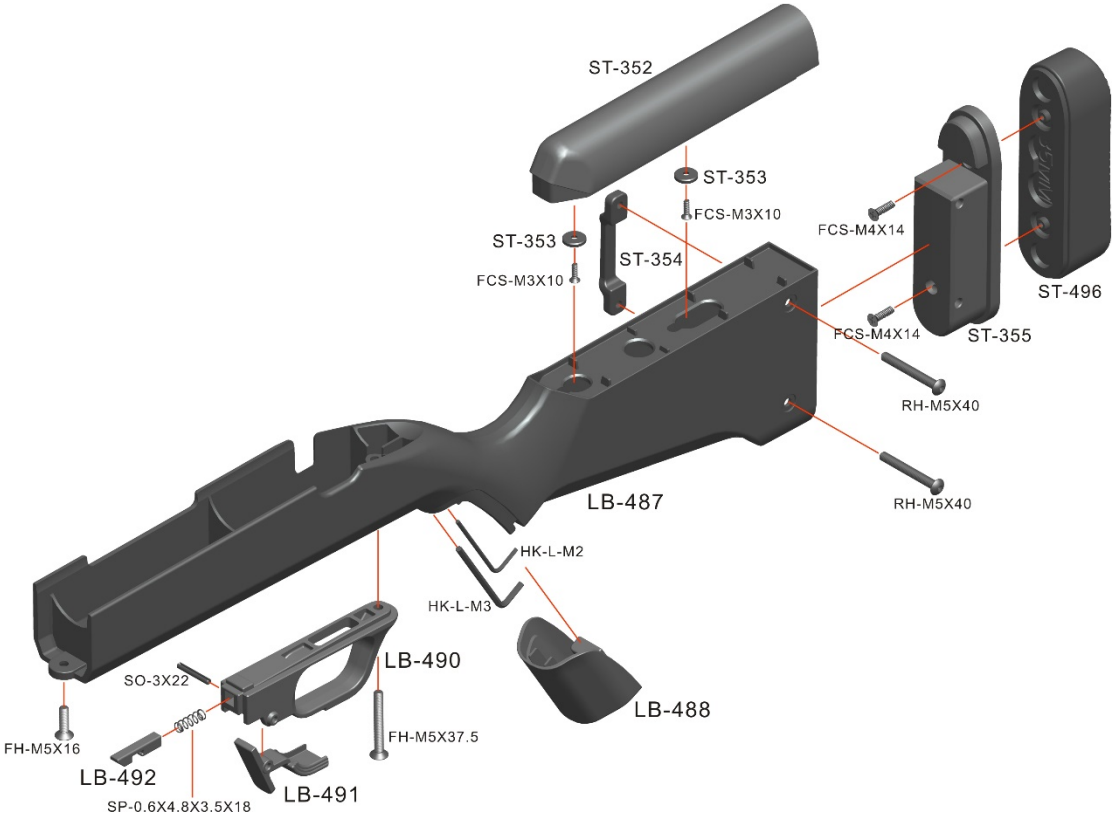
ST-352
ST-353
FCS-M3X10
ST-353
FCS-M3X10
ST-354
FCS-M4X14
ST-496
FCS-M4X14
ST-355
RH-M5X40
RH-M5X40
LB-487
HK-L-M2
HK-L-M3
LB-490
SO-3X22
LB-488
FH-M5X37.5
FH-M5X16
LB-492
LB-491
SP-0.6X4.8X3.5X18

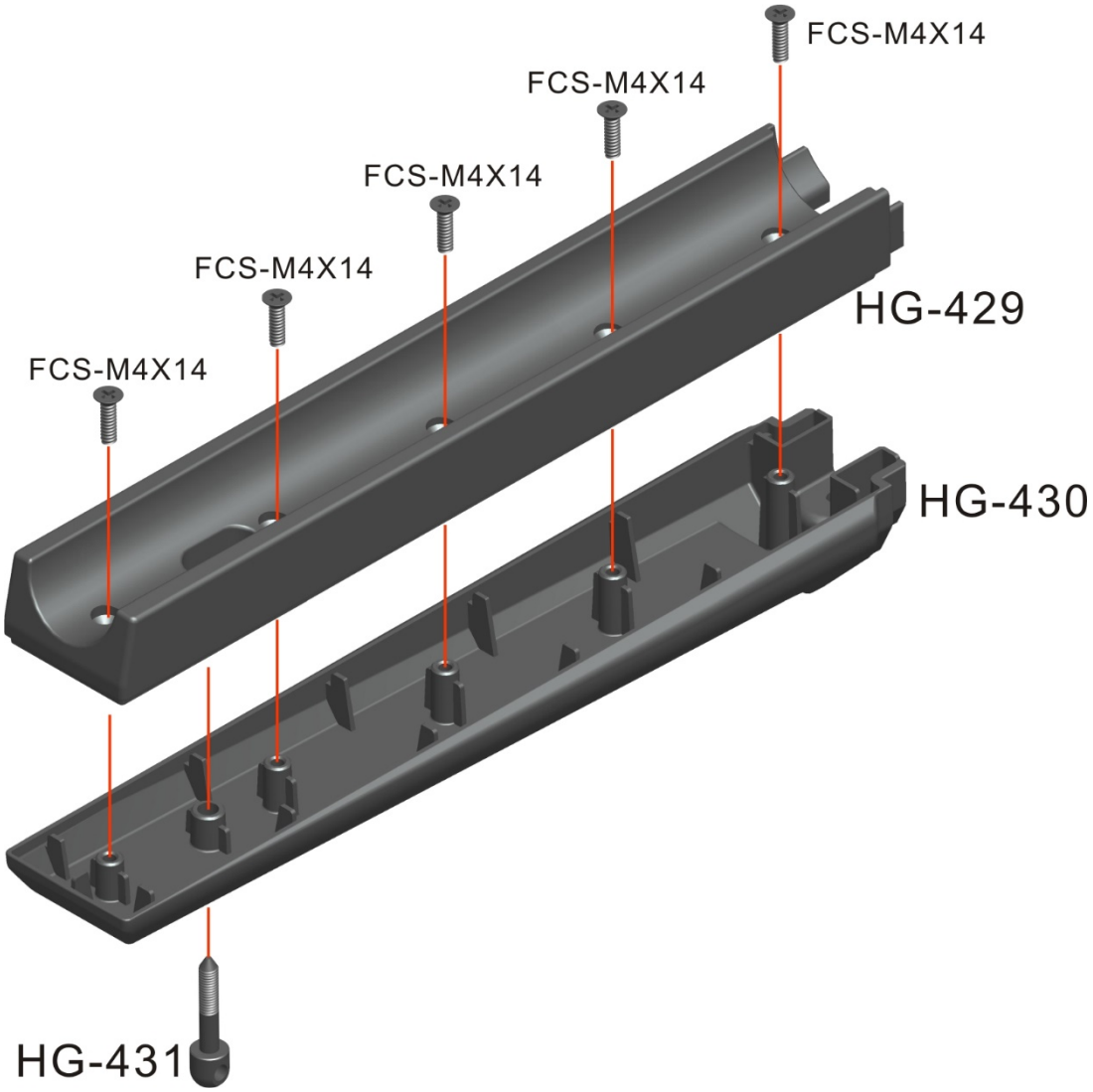
FCS-M4X14
FCS-M4X14
FCS-M4X14
FCS-M4X14
FCS-M4X14
HG-429
HG-430
HG-431

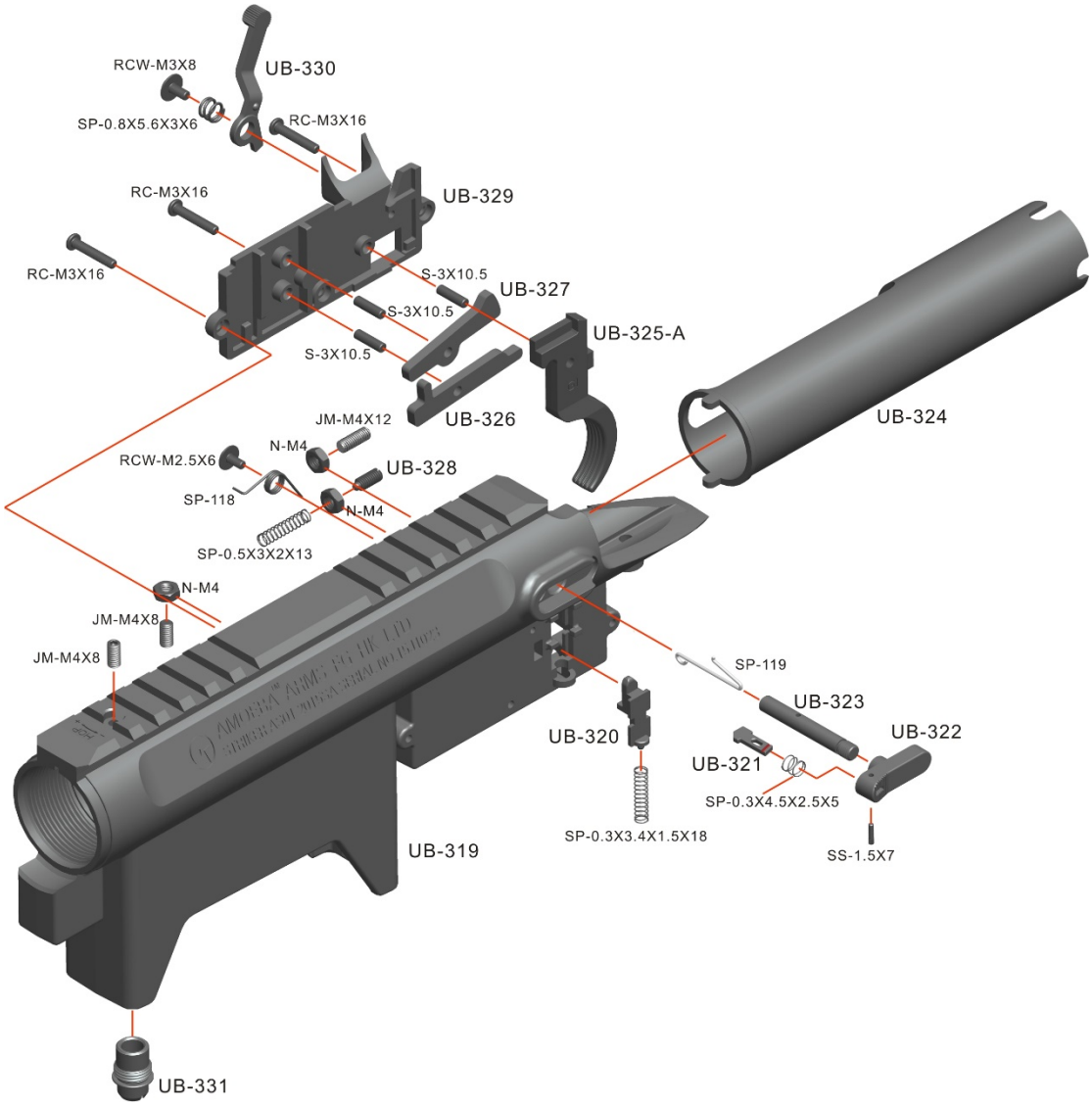
RCW-M3X8
UB-330
SP-0.8X5.6X3X6
RC-M3X16
RC-M3X16
UB-329
RC-M3X16
S-3X10.5
UB-327
S-3X10.5
UB-325-A
S-3X10.5
UB-326
JM-M4X12
UB-324
N-M4
RCW-M2.5X6
UB-328
SP-118
N-M4
SP-0.5X3X2X13
N-M4
JM-M4X8
JM-M4X8
SP-119
UB-323
UB-320
UB-322
UB-321
SP-0.3X4.5X2.5X5
SP-0.3X3.4X1.5X18
SS-1.5X7
UB-319
UB-331

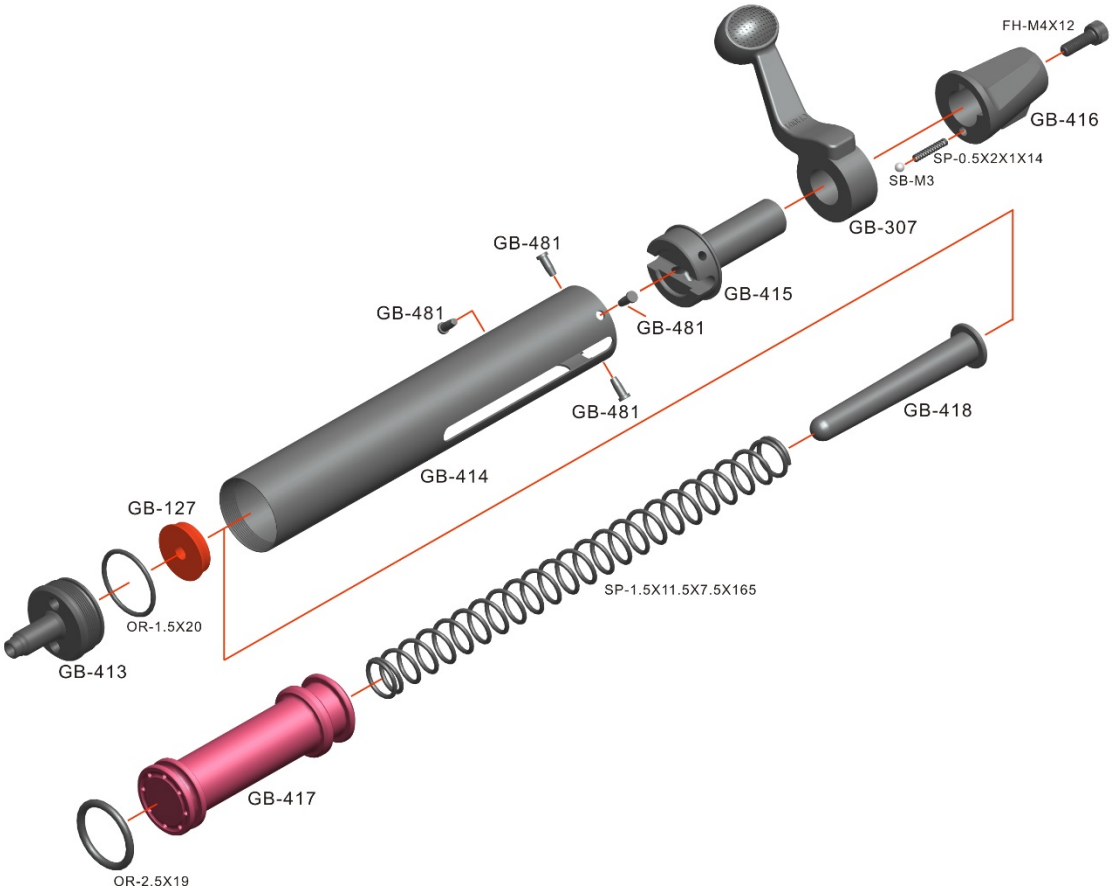
FH-M4X12
GB-416
SP-0.5X2X1X14
SB-M3
GB-307
GB-481
GB-415
GB-481
GB-481
GB-481
GB-418
GB-414
GB-127
SP-1.5X11.5X7.5X165
OR-1.5X20
GB-413
GB-417
OR-2.5X19

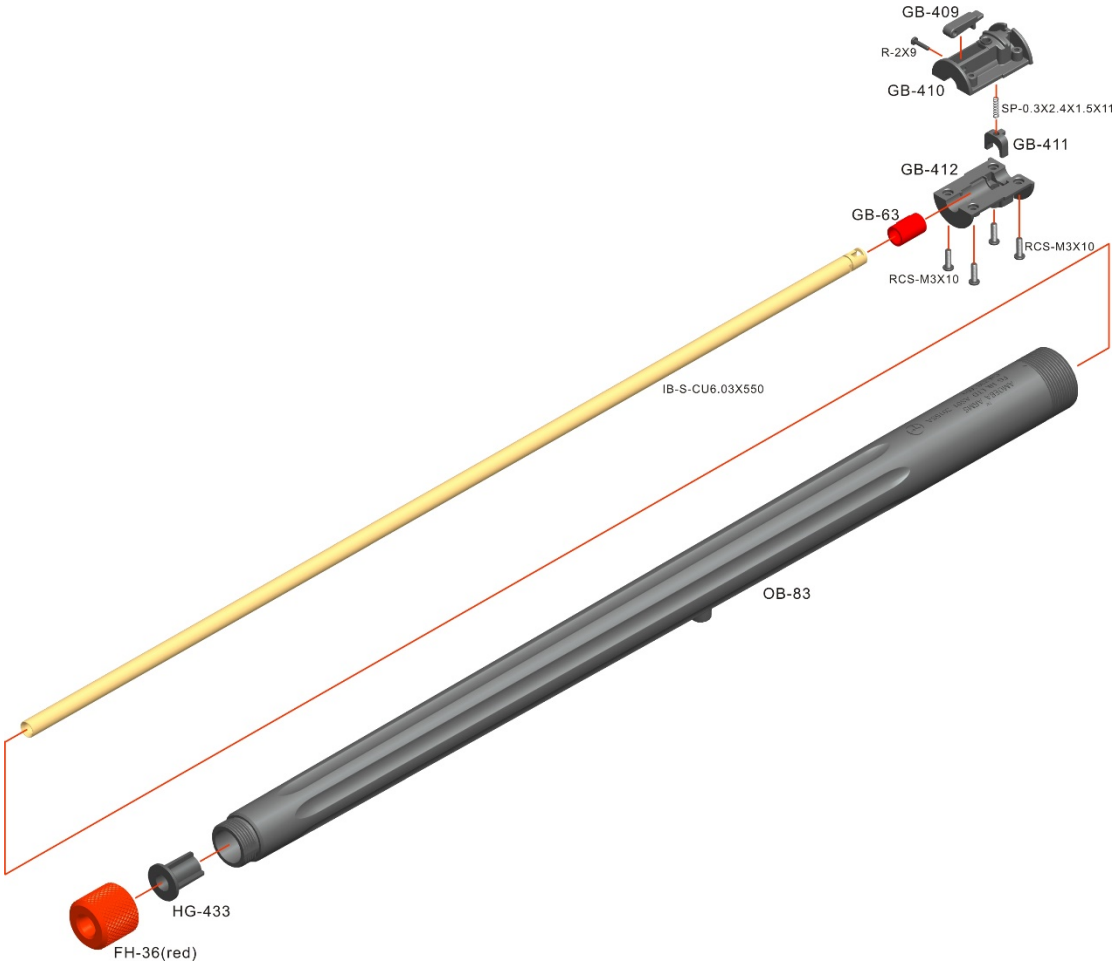
GB-409
R-2X9
GB-410
SP-0.3X2.4X1.5X11
GB-411
GB-412
GB-63
RCS-M3X10
RCS-M3X10
IB-S-CU6.03X550
OB-83
HG-433
FH-36(red)

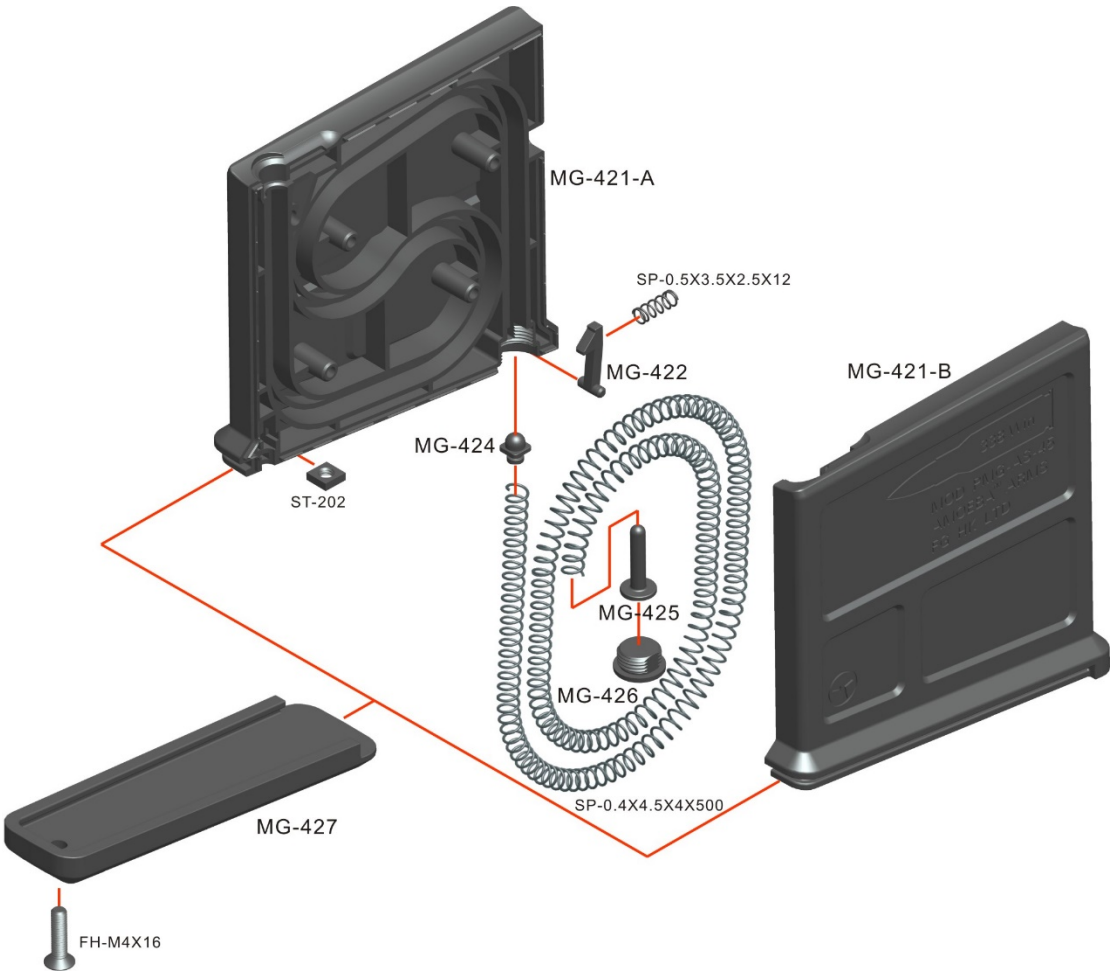
MG-421-A
SP-0.5X3.5X2.5X12
MG-422
MG-421-B
MG-424
ST-202
MG-425
MG-426
SP-0.4X4.5X4X500
MG-427
FH-M4X16